DOORS ON SERVICE AREA SIDE ONLY (REVEAL OVERLAY W/ FACE FRAME)

** = AS REQUIRED TO CLOSE SPACE BETWEEN DISPLAY CASES - GAP 1/2" MAXIMUM

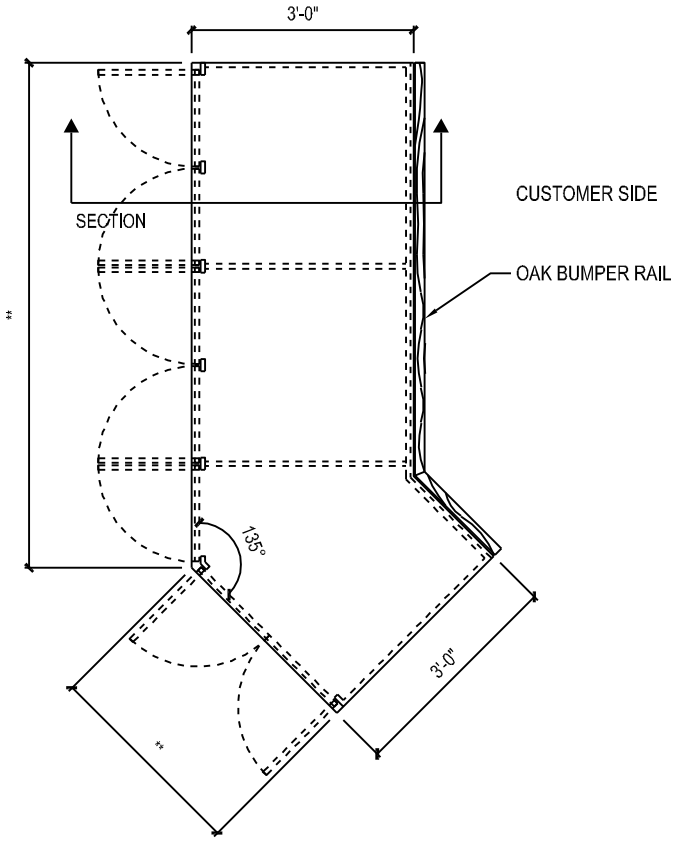

PLAN

NOTES:
DIMENSIONS INDICATED ON THIS CASEWORK ARE DEPENDENT ON BASIS-OF-DESIGN DISPLAY CASE MANUFACTURER FIXTURE SIZES AND REQUIRED CLEARANCES. IF COMPARABLE PRODUCTS FROM ANOTHER MANUFACTURER ARE PROVIDED, ADJUST DIMENSIONS ACCORDINGLY.

IF ANY PORTION OF CABINET IS TO SERVE A POINT OF SALE, ADA/ADAAG/UFAS ACCESSIBILITY REQUIREMENTS MUST BE ADDRESSED.

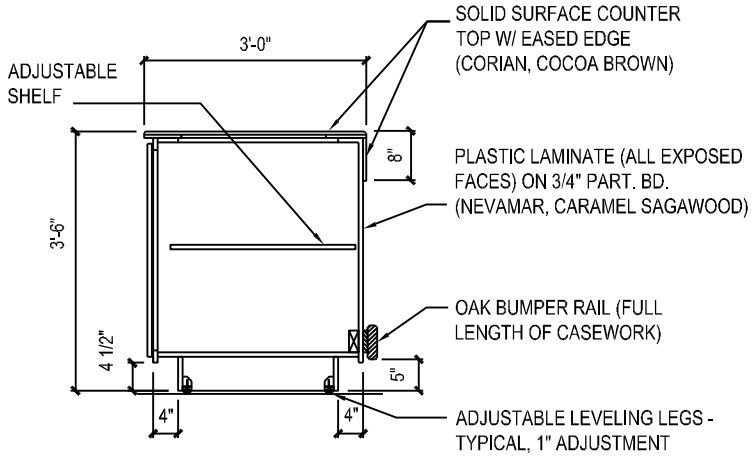

SECTION

CASEWORK DETAIL (DELI/ BAKERY)

DATE	DEFENSE COMMISSARY AGENCY DIRECTORATE OF ENGINEERING FORT LEE, VIRGINIA - LACKLAND AFB, TEXAS		DESIGN STANDARD
JUN 2022	TITLE DELI/BAKERY CUSTOMER SERVICE COUNTER	REF. REV.	064023-02